128, av. du Maréchal-de-Lattre-de-Tassigny - 87045 LIMOGES Cedex
Tel: 0 (+33) 5 55 06 87 87 - Fax: 0 (+33) 5 55 06 88 88
www.legrand.com

Plexo™
2 P+E socket outlets - Franco-Belgian Standard

Cat. No(s): 0 695 51/53 - 0 696 21/23 - 0 697 31 0 698 31/70

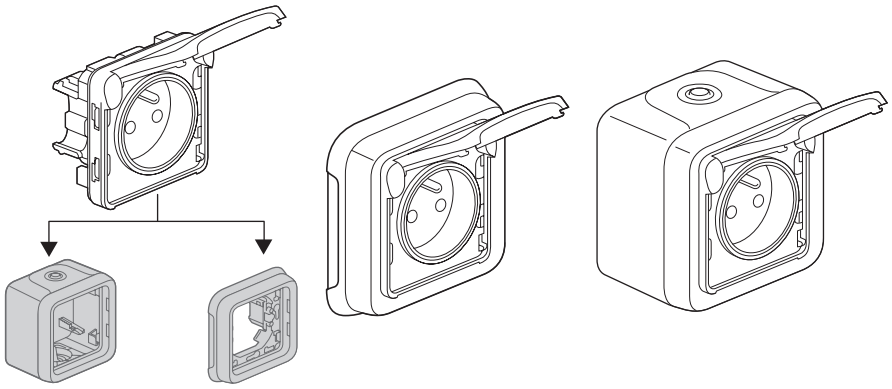

1. USE

Weatherproof wiring devices system intended for residential and professional technical premises (garages, cellars, car parks, workshops and industrial kitchens, etc.) as well as outdoor environments (patios, terraces, gardens, camping sites, etc.).
2 P+E socket outlets with protective shutters.
Tamperproof version to meet specific uses (IT, special networks), with insert Cat. No. 0 502 99.

2. RANGE

2 versions : grey and white		References
Configurable	2 P+E socket outlet Franco-Belgian	0 695 51 0 696 21
	2 P+E socket outlet Franco-Belgian Tamperproof	0 695 53 0 696 23
Surface-mounting Complete	2 P+E socket outlet Franco-Belgian	0 697 31
Flush-mounting Complete	2 P+E socket outlet Franco-Belgian	0 698 31/70

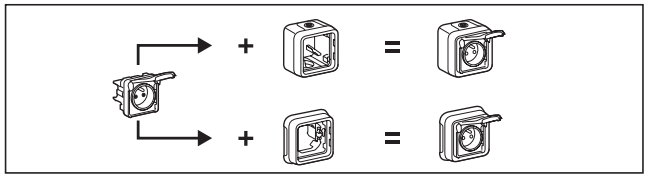

3. PREPARATION

■ 3.1 Surface-mounting

- By screwing the base box onto the support using 2 screws Ø 3-4 mm max.

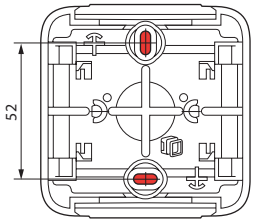

3. PREPARATION *(continued)*

■ 3.2 Flush-mounting

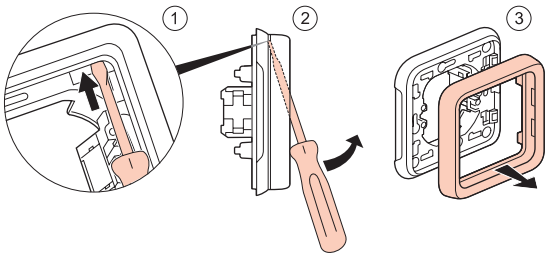

- By screwing onto a flush-mounting box

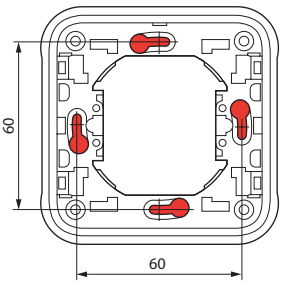

- By claws onto a flush mounting box

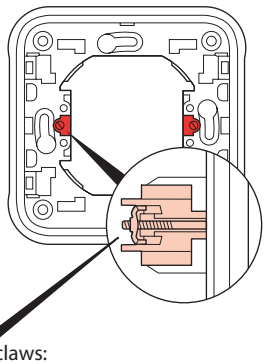

Possibility to place claws:
Cat. No. 0 849 00 or Cat. No. 0 849 01 (long claw)

- By face plate using 4 screws Ø 4 mm

Piercing of support material for diameter 60-70 mm using cylinder saw or punch.

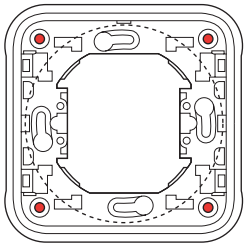

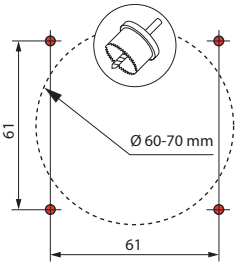

4. OVERALL DIMENSIONS (mm)

■ **Configurable**

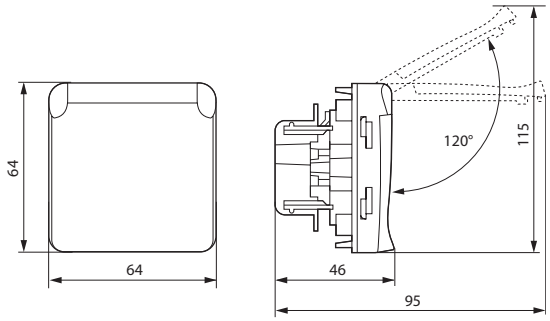

■ **Surface-mounting**

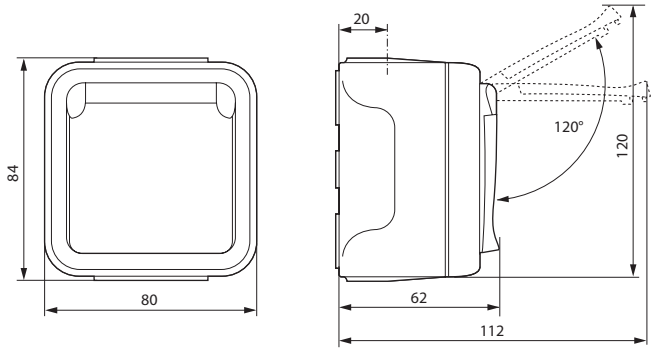

■ **Flush-mounting**

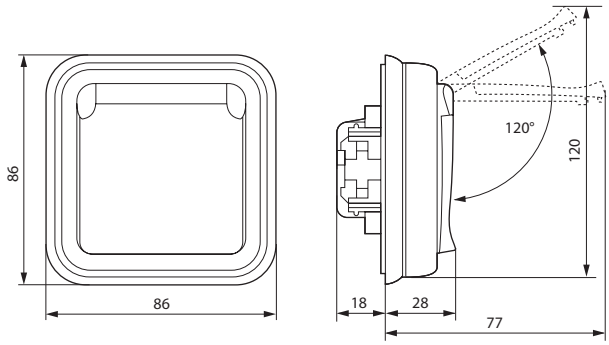

5. CONNECTION

Connection to conductors

■ **2 P+E socket outlets**
Type of terminals: automatics
Terminal capacity: from 1.5 mm^2 to 2.5 mm^2
Stripping length: 13 mm

■ **2 P+E socket outlets tamperproof**
Type of terminals: with screws
Terminal capacity: 2 x 2.5 mm^2
Stripping length: 9 mm
Screwdriver: flat 4 mm

6. TECHNICAL CHARACTERISTICS

■ **6.1 Protection index (shutter closed)**
Protection against solid bodies and liquids: IP 55
Protection against impact: IK 07

■ **6.2 Material characteristics**
Box, support: PP reinforced polypropylene
Plate, shutter: ABS
Outlet gland: PP + SEBS
Mechanism: PC

UV resistant
Resistance to salt spray: 7 days (168 h)

Self-extinguishing:
+ 850°C / 30 s for insulating components holding in place live parts.
+ 650°C / 30 s for the other insulating components.

■ **6.3 Electrical characteristics**
Current: 16 A
Voltage: 250 V~
Frequency: 50 Hz

■ **6.4 Climatic characteristics**
Storage temperature: - 25° C to +70° C
Use temperature: - 25° C to + 40° C

7. CLEANING

Surface cleaning with dry cloth or cloth dipped in soapy water.
Do not use acetone, tar remover or trichloroethylene.

Caution: A test should be carried out before using any specific cleaners.

8. STANDARDS AND APPROVALS

Compliance with standards of installation and manufacturing.
Refer to e. catalogue.