87045 LIMOGES Cedex
Telephone number: +33 (0)5 55 06 87 87 – Fax: +33 (0)5 55 06 88 88

TX³ RCCBs
4P (N on right), up to 63 A

Cat. N°(s): 4 119 31, 4 119 32, 4 119 33, 4 119 36, 4119 37, 4 119 38, 4 119 42, 4 119 43, 4 119 47, 4 119 48



CONTENTS PAGE

1. Description, use....1
2. Range....1
3. Overall dimensions....1
4. Preparation - Connection....1
5. General characteristics....4
6. Compliance and approvals....8
7. Curves....9
8. Auxiliaries and accessories....10
9. Safety....10

1. DESCRIPTION - USE

Residual current circuit breaker (RCCB) with positive contact indication for control, protection and isolation of electrical circuits, protecting people from direct and indirect contact and protecting installations from insulation faults.

Symbol:

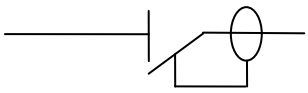

Technology:
. Electromagnetic residual current function with current-sensing relay

2. RANGE

Polarity:
. 4-pole

Width:
. 4 modules (4 x 17.8 mm)

Nominal rating In:
. 25 / 40 / 63 A

Residual current types:
. A (residual currents with a DC component)
. A-S (discriminating)

Sensitivity:
. 30 / 100 / 300 mA

Nominal voltage and frequency:
. 415 V~, 50 Hz with standard tolerances

Maximum operating voltage:
. 440 V ~, 50 Hz

3. OVERALL DIMENSIONS

. Without sealable screw cover:

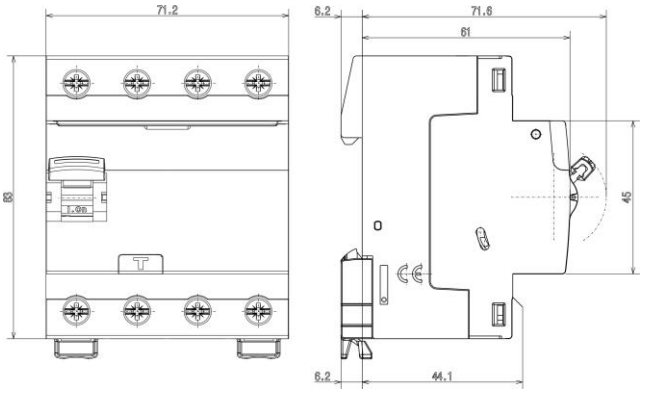

. With sealable screw cover:

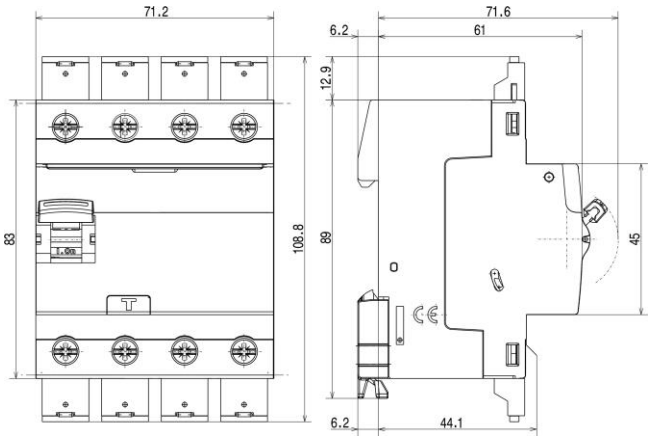

4. PREPARATION – CONNECTION

Mounting:
. On symmetrical rail EN 60715 or DIN 35 rail

Operating positions:

. Vertical horizontal upside down on the side

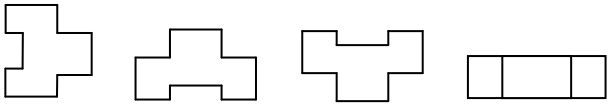

Power supply:
. From the top or the bottom

Connection:
. Inputs and outputs via screw terminals
. Cage terminals, with disengageable and captive screws
. Neutral on right

Accessories:
Delivered with 4 sealable screw cover, for the upstream or downstream terminals.



4. PREPARATION - CONNECTION *(continued)*

. A RCCB may be replaced in the middle of a row supplied with fork busbars without disconnecting the other products

Unscrew the terminals completely

Put the clamp in the unlocking position with a screwdriver

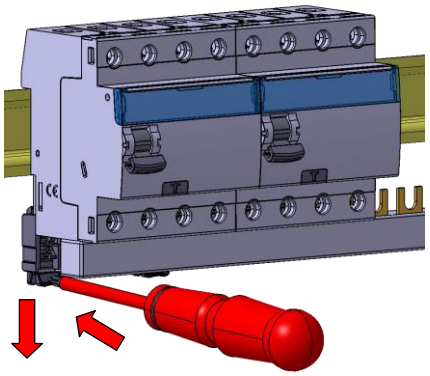

Pull the device upward

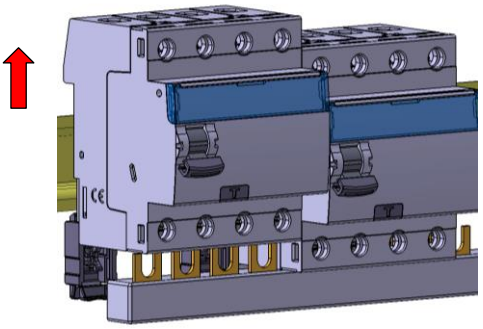

Pull the device downward in order to release it completely from the prongs of the busbar. Then pull the device forward

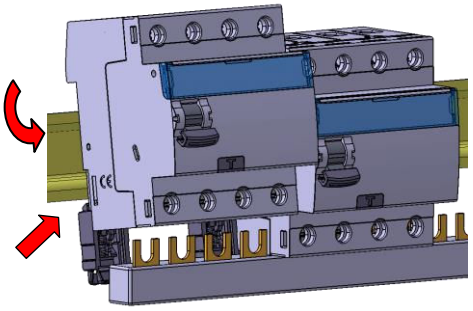

4. PREPARATION - CONNECTION *(continued)*

Terminal arrangement:

. Terminals protected against direct finger contact IP20, wired device
. Alignment and spacing of the terminals permitting shutters with the other products via fork supply busbars.
. Terminal depth: 14 mm
. Terminal capacity: 60 mm²
. Screw head: mixed head, slotted head and Philips / Pozidriv no. 2
. Tightening torques:
- Minimum / Maximum: 1.2 Nm / 3.5 Nm
- Recommended: 2.5 Nm

Conductor types:

. Copper cables at the top and bottom of the product
- Cable cross-section:

	Without ferrule	With ferrule
Rigid cable	**1 x 0.75 to 50 mm²** **or** **2 x 0.75 to 16 mm²**	**/**
Flexible cable	**1 x 0.75 to 35 mm²** **or** **2 x 0.75 to 16 mm²**	**1 x 0.75 to 25 mm²**

Required tools:

. For the terminals:
- 5.5 mm / 6.5 mm blade screwdriver recommended
- Pozidriv n°2 / Philips N°2 screwdriver recommended

. For the latching:
- 5.5 mm blade screwdriver recommended / 6 mm maximum
- Pozidriv n°2 / Philips N°2 screwdriver recommended

Manual Actuation:

. Manual action via ergonomic 2 position handle:
- I-On, device closed
- O-Off, device open

Contact status display:

. By marking of the handle:
- I-On, in white on a red background: closed contacts
- O-Off, in white on a green background: contacts open

Residual current trip display:

. Handle at the bottom position, the residual current is released

Lockout:

. Padlocks possible in the open or closed positions with padlock support (Cat. No. 4 063 03) and Ø5 mm padlock (Cat. No. 4 063 13) or Ø6 mm padlock (Cat. No. 227 97)

Sealing:

. Possible in the open or closed positions, even with the screw cover

4. PREPARATION - CONNECTION *(continued)*

Labelling:

. Circuit identification by way of a label inserted in the label holder situated on the front of the product

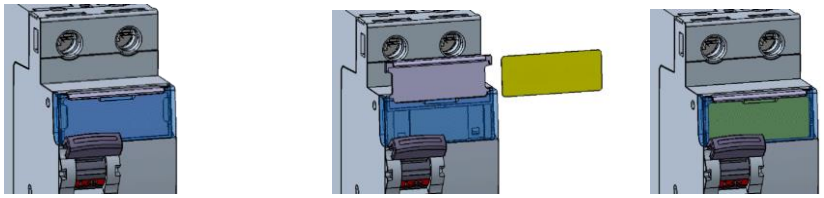

5. GENERAL CHARACTERISTICS

Neutral earthing system:

. IT, TT and TN

Marking:

. "N" marking of the neutral, near to the terminal
. Marking on the "front side": (by permanent ink pad printing)



Marking on the upper panel:

. By permanent ink pad printing

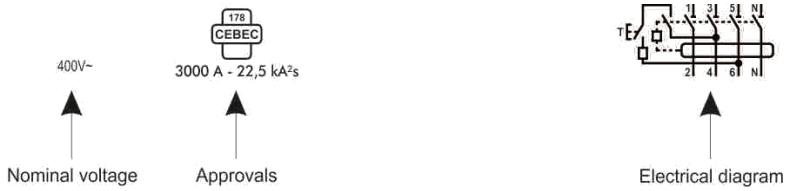

Test operating voltage:

30mA A type : from 320V to 440V
100mA A type : from 230V to 440V
300mA A types : from 215V to 440V
300mA A-S types: from 230V to 440V

Rated conditional short-circuit current:

. Inc = 10 kA, in accordance with EN/IEC 61008-1

Rated conditional short-circuit residual current:

. IΔc = 10 kA, in accordance with EN/IEC 61008-1

Rated residual breaking capacity:

. IΔm = 1000 A, in accordance with EN/IEC 61008-1

Rated breaking and making capacity:

In accordance with EN/IEC 61008-1,
. In = 25 / 40 A : Im = 500 A
. In = 63 A : Im = 630 A

5. GENERAL CHARACTERISTICS *(continued)*

Specific use:

. Appropriate to operate in humid atmosphere and polluted by a chlorined environment (pool-type)

Protection against overloads:

. The RCCB must be protected against overloads (either upstream or downstream) by a circuit breaker or a fuse which has a maximum of the same nominal current as the residual current switch

Protection against short-circuits:

. The RCCB must be protected upstream against short circuits using a circuit breaker or a fuse. Its resistance to short circuits when associated with a Legrand circuit breaker or fuse is compliant with the values stated in the tables below:

. Association with a circuit breaker:

		Upstream circuit breaker	
		TX³ 3000 A	TX³ 6000 A
Downstream TX³ RCCB 4P	Curves	C	B, C & D
	In	≤ 40 A	≤ 63 A
4P - 400 V~	25 A to 63 A	- kA	**10 kA**

		Upstream circuit breaker				
		DX³ 4500 / 6 kA 3P / 4P 3 mod	DX³ 6000 / 10 kA	DX³ 10000 / 16 kA	DX³ 25 kA	DX³ 36 kA
Downstream TX³ RCCB 4P	Curves	C	B, C & D	B, C & D	B, C & D	C
	In	≤ 32 A	≤ 63 A	≤ 125 A	≤ 125 A	≤ 80 A
4P - 400 V~	25 A to 63 A	**6 kA**	**10 kA**	**16 kA**	**25 kA**	**36 kA**

		Upstream circuit breaker				
		DX³ 50 kA	DPX³ 160 / DPX³ 160 + residual current			
			16 kA	25 kA	36 kA	50 kA
Downstream TX³ RCCB 4P	Curves	B, C & D				
	In	≤ 63 A	≤ 160 A	≤ 160 A	≤ 160 A	≤ 160 A
4P - 400 V~	25 A to 63 A	**50 kA**	**16 kA**	**25 kA**	**25 kA**	**25 kA**

. Association with circuit breakers: case of a double fault, in IT system – Resistance to the Icc of a single pole

Downstream TX³ RCCB 4P	Circuit breaker upstream			Circuit breaker upstream			
	DX³ 3P / 4P 3 mod	DX³ 3P / 4P 3 mod	DX³ 1P / 2P / 3P / 4P	DX³ 1P / 2P / 3P / 4P	DX³ 1P / 2P / 3P / 4P	DX³ 1P / 2P / 3 P/ 4P	DX³ 1P / 2P / 3P / 4P
	4500 A / 6 kA	6000 A / 10 kA		10,000 A / 16 kA	25 kA	36 kA	36 kA
At 230 V	**4.5 kA**	**6 kA**	**10 kA**	**16 kA**	**25 kA**	**36 kA**	**50 kA**
At 400 V	**3 kA**	**3 kA**	**3 kA**	**4 kA**	**6.25 kA**	**9 kA**	**12.5 kA**

5. GENERAL CHARACTERISTICS *(continued)*

Protection against short circuits (continued):

. Association with a fuse:

Downstream	Upstream			
TX³ RCCB 4P	gG or aM type fuse			
Rating	≤ 50 A	63 A	80 A	≥ 100 A
25 A to 63 A	**100 kA**	**50 kA**	**15 kA**	**10 kA**

Power dissipated by the device:

TX³ RCCB 4P		Power dissipated by the device (In)	
Rating	Sensitivity	A type	A-S
25 A	30 mA	**6 W**	
25 A	100 mA	**1.9 W**	
40 A	30 mA	**15.3 W**	
40 A	100 mA	**4.8 W**	
40 A	300 mA	**4.8 W**	**4.5 W**
63 A	30 mA	**11.8 W**	
63 A	100 mA	**11.8 W**	
63 A	300 mA	**11.8 W**	**11.8 W**

Temperature derating:

. Reference temperature: 30°C in accordance with standard IEC 60947-2

	Ambient Temperature/In								
In (A)	- 25°C	- 10°C	0°C	10°C	20°C	30°C	40°C	50°C	60°C
25 A	**25**	**25**	**25**	**25**	**25**	25	**25**	**25**	**25**
40 A	**40**	**40**	**40**	**40**	**40**	40	**40**	**25**	**25**
63 A	**63**	**63**	**63**	**63**	**63**	63	**63**	**40**	**40**

Weight per device:

Catalogue Number	Description	Weight (kg)
4 11931	25 A A type 30 mA	**0.33**
4 119 36	25 A A type 100 mA	**0.38**
4 119 32	40 A A type 30 MA	**0.33**
4 119 37	40 A A type 100 MA	**0.38**
4 119 42	40 A A type 300 MA	**0.33**
4 119 47	40 A AS type 300 MA	**0.33**
4 119 33	63 A A type 30 MA	**0.36**
4 119 38	63 A A type 100 MA	**0.38**
4 119 43	63 A A type 300 MA	**0.39**
4 119 48	63 A AS type 300 MA	**0.39**

5. GENERAL CHARACTERISTICS *(continued)*

Packaged volume and quantity:

	Volume (dm^3)	Packaging
For all catalogue numbers	**0.70**	**per unit**

Isolation distance: (distance between the contacts)

. Handle in open position - O-Off:
- Neutral pole: greater than 4.5 mm
- Phase pole: greater than 5.5 mm

Rated insulation voltage:

. Ui = 500 V

Insulation resistance:

. 2 MΩ

Degree of pollution:

. 2

Dielectric strength:

. 2000 V - 50 Hz

Impulse withstand voltage:

. Uimp = 4 kV

Protection from false tripping:

. 0.5 µs/100 kHz damped recurring wave = 200 A
. 8/20 µs wave:
- A type = 250 A
- A-S type = 3000 A

Plastic materials used:

. Parts made of polyamide and P.B.T.

Protection classes:

. Terminals protected against direct contact:
- IP20 (wired device)

. Front side protected against direct contact:
- IP40

. Class II in relation to metallic conductive parts
. Protection against impacts:
- IK04

Enclosure heat and fire resistance:

. Resistance to incandescent wire tests at 960°C, in accordance with standard EN/IEC 61008-1
. Classification V2, in accordance with standard UL94

Device's upper heating value:

. Estimated heating value of a 40A 30mA AC device:
4.30 MJ

Handle opening and closing forces:

. Force of 42 N for closing - (all ratings)
. Force of 13 N for opening - (all ratings)

Mechanical endurance:

. Conforms to standard EN/IEC 61008-1
. Tested with 20,000 operations with no load

5. GENERAL CHARACTERISTICS *(continued)*

Electrical endurance:

. Conforms to standard EN/IEC 61008-1
. Tested with 10,000 operations with load (at In x Cos φ 0.9)
. Tested with 2,000 residual current trip operations using the test button or the fault current

Ambient temperature:

. Operating: - 25°C / + 60°C
. Storage: - 40°C / + 70°C

Derating of RCCBs function of the number of devices placed side by side:

When several RCCBs are installed side by side and operate simultaneously, the heat dissipation of one pole is limited. This results in an increased operating temperature for the RCCBs which may cause false tripping. Applying the following coefficients to the operating currents is recommended.

Number of circuit breakers side by side	Coefficient
2 - 3	**0.9**
4 - 5	**0.8**
6 - 9	**0.7**
≥ 10	**0.6**

These values are provided by recommendation IEC 60439-1.
In order to avoid having to use these coefficients there must be good ventilation and the devices must be kept apart using the spacing elements Cat. No. 4 063 07 (0.5 module).

Impact of height:

	2,000 m	3,000 m	4,000 m	5,000 m
Dielectric strength	**2,000 V**	**2,000 V**	**2,000 V**	**1,500 V**
Maximum operating voltage	**400 V**	**400 V**	**400 V**	**400 V**
Derating at 30°C	**none**	**none**	**none**	**none**

DC operation:

. Cannot be used with DC

Operation at 400 Hz:

. Cannot be used at 400 Hz

Operation at 60 Hz:

.Can be used at 60Hz, except ratings 40A/63A, A type, with sensitivity 30mA.

Resistance to sinusoidal vibrations: (in accordance with IEC 68.2.6)

. Axes: x / y / z
. Frequency: 10 to 55 Hz
. Acceleration: 3 g (1 g = 9.81 $m.s^{-2}$)

5. GENERAL CHARACTERISTICS *(continued)*

Resistance to tremors :
. Conforms to standard EN/IEC 61008-1

6. COMPLIANCE AND APPROVALS

In accordance with standards:
. EN/IEC 61008-1
. EN/IEC 60 529 (IP)

Approvals:
. CEBEC + 3000A 22.5A²s

Environment: respect – Compliance with EEC direcrives:
. Compliance with European Union Directives
. Compliance with Directive 2002/95/EC of 27/01/03 known as "RoHS" which provides for a restriction on the use of dangerous substances such as lead, mercury, cadmium, hexavalent chromium and polybrominated biphenyl (PBB) and polybrominated diphenyl ether (PBDE) brominated flame retardants from 1st July 2006
. Compliance with the Directive 91/338/EEC of 18/06/91 and decree 94-647 of 27/07/94

Usage in special conditions:
. Category C compliant (testing temperature of -25°C to +70°C, resistant to salt spray) in accordance with the classification defined in Appendix Q of standard IEC 60947-1

Plastic materials:
. Zero halogen plastic materials.
. Labelling compliant with ISO 11469 and ISO 1043.

Packaging:
. Design and manufacture of packaging compliant with decree 98-638 of 20/07/98 and Directive 94/62/EC

7. CURVES

Tripping current curves:

. Tripping time curve depending on the value of the fault current:

TYPE

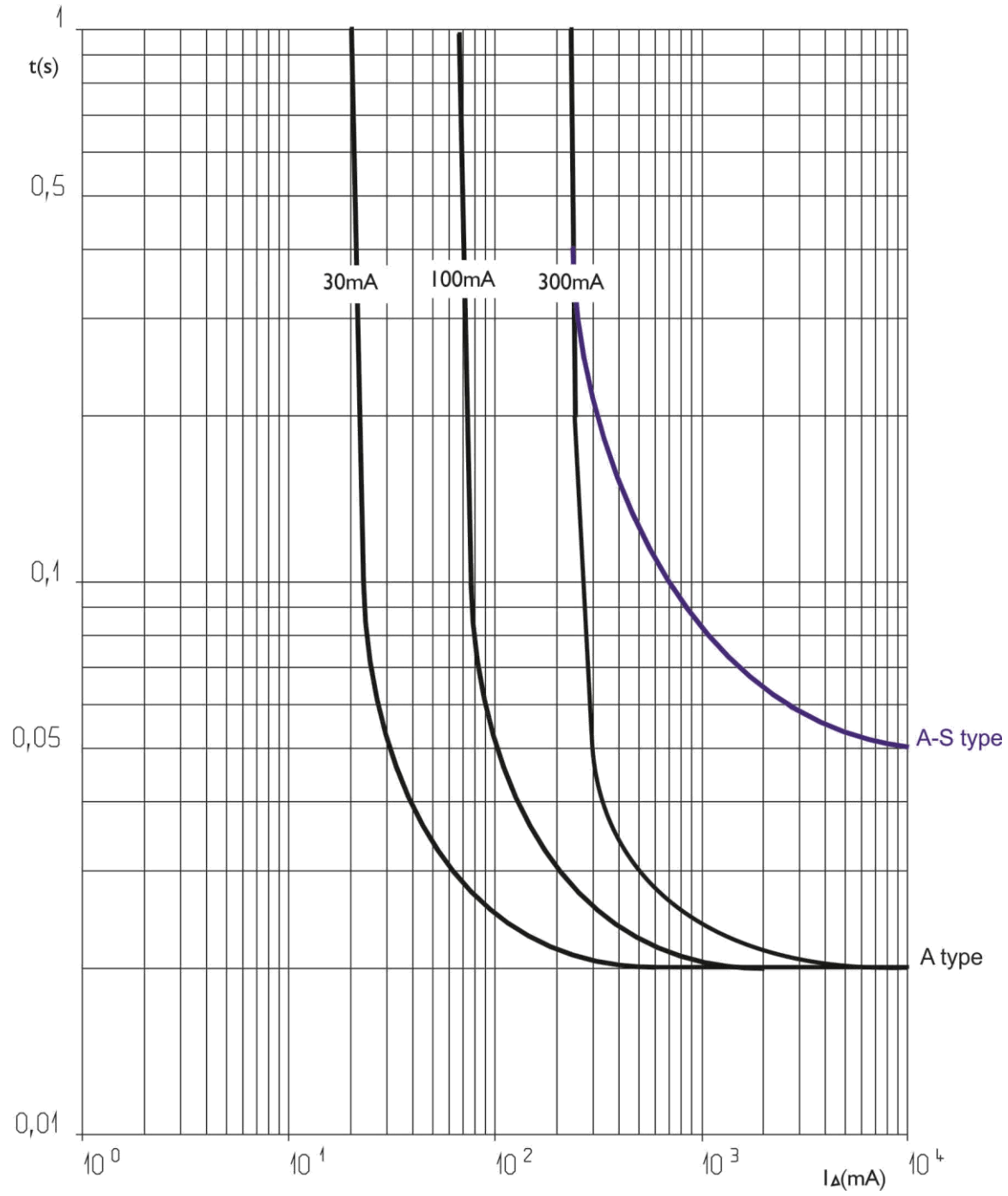

8. AUXILIARIES AND ACCESSORIES

Wiring accessories:
. Fork busbar
. Pin busbar HX³ traditional.
. Sealable screw cover (cat n° 4 063 04).
. Insulating shields (cat n° 4 063 05)

Signalling auxiliaries - fork busbar adapted:
. Auxiliary contact (½ module – cat n° 4 062 50).
. Fault signalling changeover switch (½ module – cat n° 4 062 52).
. Auxiliary contact modifiable in default signal (½ module – cat n° 4 062 56).
. Auxiliary contact + fault signalling switch - can be modified to 2 auxiliary contacts (1 module - cat n° 4 062 64)

Signalling auxiliaries - prong busbar adapted:
. Auxiliary contact (½ module – cat n° 4 062 58).
. Fault signalling changeover switch (½ module – cat n° 4 062 60).
. Auxiliary contact modifiable in default signal (½ module – cat n° 4 062 62).
. Auxiliary contact + fault signalling switch - can be modified to 2 auxiliary contacts (1 module - cat n° 4 062 66).

Control auxiliaries:
. Shunt releases (1 module - cat n° 4 062 76 /78)
. Under voltage release (1 module - cat n° 4 062 80 /82)
. Autonomous shunt trip for NC push-button (1 module - cat n° 4 062 84).
. Power Overvoltage Protection (1 module – cat n° 4 062 86)

Motor driven control modules
. Motor driven control module (1 module – cat n° 4 062 91)
. Motor driven control module with automatic resetting integrated (2 modules – cat n° 4 062 93 /95)

Front external rotary handle
. Black handle (cat nat n° 4 063 19)
. Yellow and red handle (cat n° 4 063 20)

Possible combinations of rccb and auxiliaries:
. Auxiliaries are clipped on the left of the rccb.
. Maximum number of auxiliaries for one circuit-breaker: 3.
. Two signalling auxiliaries max. (cat. n° 4 062 58 /60 /62 /66).
. Only one control auxiliary (cat. n° 4 062 76 /78 /80 /82 / 84).
. One remote control or Stop & Go motor driven remote control
. If signalling and control auxiliaries are associated on the same circuit breaker, the command auxiliary must be placed to the left of the signal auxiliary

Installation software:
. XL PRO³

9. SAFETY

. For your safety your electrical installation is equipped with residual current protection and this must be tested periodically. In the absence of any national regulations on the time period required for this, Legrand recommends that this test be carried out every month: press the "T" test button, the device should trip. Please call an electrician immediately if this does not happen as your installation's safety level has been reduced

. The presence of residual current protection does not remove the need to observe all the precautions associated with using electrical energy