FLOODLIGHT

65 W – 200 W

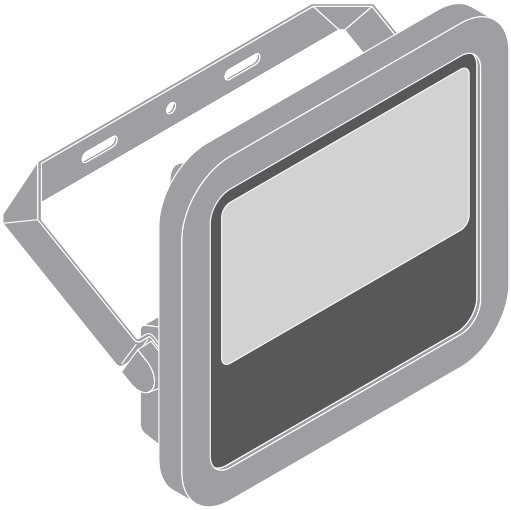

	EAN	l x w x h [mm]	W	V_{AC}	Hz	lm	lm/W	K
FL PFM 65W/3000K SYM 100 BK	4058075422445	268 x 237 x 49	65	100-277 V	50/60 Hz	7150	110	3000
FL PFM 65W/4000K SYM 100 BK	4058075422469	268 x 237 x 49	65	100-277 V	50/60 Hz	8000	123	4000
FL PFM 65W/6500K SYM 100 BK	4058075422483	268 x 237 x 49	65	100-277 V	50/60 Hz	8000	123	6500
FL PFM 80W/3000K SYM 100 BK	4058075422506	335 x 250 x 55	80	100-277 V	50/60 Hz	8800	110	3000
FL PFM 80W/4000K SYM 100 BK	4058075422520	335 x 250 x 55	80	100-277 V	50/60 Hz	10000	125	4000
FL PFM 80W/6500K SYM 100 BK	4058075422544	335 x 250 x 55	80	100-277 V	50/60 Hz	10000	125	6500
FL PFM 125W/3000K SYM 100 BK	4058075423695	381 x 290 x 59	125	100-277 V	50/60 Hz	13750	110	3000
FL PFM 125W/4000K SYM 100 BK	4058075423701	381 x 290 x 59	125	100-277 V	50/60 Hz	15000	120	4000
FL PFM 125W/6500K SYM 100 BK	4058075423718	381 x 290 x 59	125	100-277 V	50/60 Hz	15000	120	6500
FL PFM 165W/3000K SYM 100 BK	4058075423725	418 x 322 x 60	165	100-277 V	50/60 Hz	18150	110	3000
FL PFM 165W/4000K SYM 100 BK	4058075423732	418 x 322 x 60	165	100-277 V	50/60 Hz	20000	121	4000
FL PFM 165W/6500K SYM 100 BK	4058075423749	418 x 322 x 60	165	100-277 V	50/60 Hz	20000	121	6500
FL PFM 200W/3000K SYM 100 BK	4058075423756	454 x 354 x 62	200	100-277 V	50/60 Hz	22000	110	3000
FL PFM 200W/4000K SYM 100 BK	4058075423763	454 x 354 x 62	200	100-277 V	50/60 Hz	25000	125	4000
FL PFM 200W/6500K SYM 100 BK	4058075423770	454 x 354 x 62	200	100-277 V	50/60 Hz	25000	125	6500

LEDVANCE

	EAN	IP	IK	◇	R_a	(°C)	PF	
FL PFM 65W/3000K SYM 100 BK	4058075422445	65	08	100°	≥ 80	-30...+50	> 0.9	2.1 kg
FL PFM 65W/4000K SYM 100 BK	4058075422469	65	08	100°	≥ 80	-30...+50	> 0.9	2.1 kg
FL PFM 65W/6500K SYM 100 BK	4058075422483	65	08	100°	≥ 80	-30...+50	> 0.9	2.1 kg
FL PFM 80W/3000K SYM 100 BK	4058075422506	65	08	100°	≥ 80	-30...+50	> 0.9	2.8 kg
FL PFM 80W/4000K SYM 100 BK	4058075422520	65	08	100°	≥ 80	-30...+50	> 0.9	2.8 kg
FL PFM 80W/6500K SYM 100 BK	4058075422544	65	08	100°	≥ 80	-30...+50	> 0.9	2.8 kg
FL PFM 125W/3000K SYM 100 BK	4058075423695	65	08	100°	≥ 80	-30...+50	> 0.9	3.8 kg
FL PFM 125W/4000K SYM 100 BK	4058075423701	65	08	100°	≥ 80	-30...+50	> 0.9	3.8 kg
FL PFM 125W/6500K SYM 100 BK	4058075423718	65	08	100°	≥ 80	-30...+50	> 0.9	3.8 kg
FL PFM 165W/3000K SYM 100 BK	4058075423725	65	08	100°	≥ 80	-30...+50	> 0.9	4.8 kg
FL PFM 165W/4000K SYM 100 BK	4058075423732	65	08	100°	≥ 80	-30...+50	> 0.9	4.8 kg
FL PFM 165W/6500K SYM 100 BK	4058075423749	65	08	100°	≥ 80	-30...+50	> 0.9	4.8 kg
FL PFM 200W/3000K SYM 100 BK	4058075423756	65	08	100°	≥ 80	-30...+50	> 0.9	6.0 kg
FL PFM 200W/4000K SYM 100 BK	4058075423763	65	08	100°	≥ 80	-30...+50	> 0.9	6.0 kg
FL PFM 200W/6500K SYM 100 BK	4058075423770	65	08	100°	≥ 80	-30...+50	> 0.9	6.0 kg

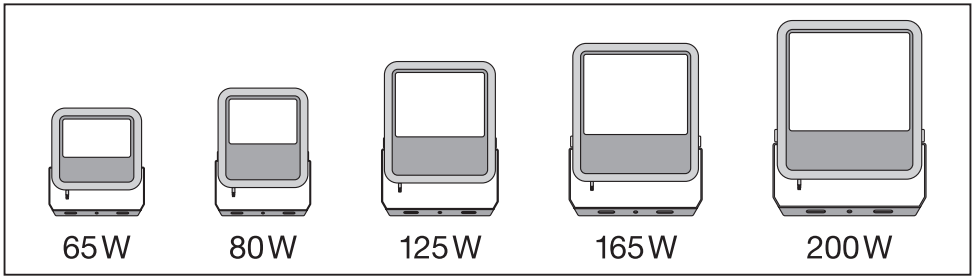

		A	B	C			230 Vac C10A	230 Vac B16A	230 Vac C16A
65W	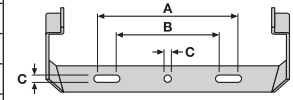	150	108	8.5	2x M8	0.046 m²	21	29	33
80W		150	108	10.5	2x M10	0.061 m²	17	24	28
125W		170	118	10.5	2x M10	0.083 m²	7	4	11
165W		170	118	12.5	2x M12	0.102 m²	5	3	8
200W		170	118	12.5	2x M12	0.124 m²	5	3	8

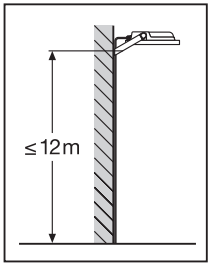

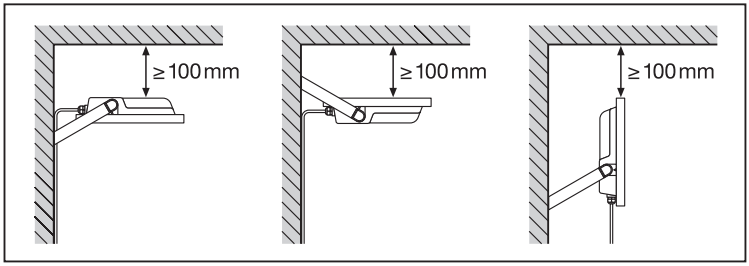

LEDVANCE

1

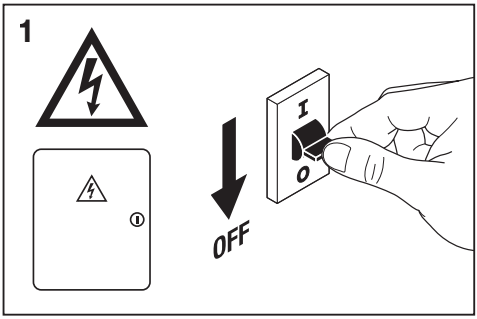

2

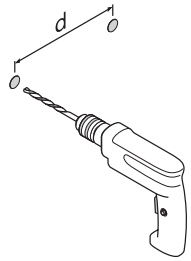

	d
65 W	130 mm
80 W	130 mm
125 W	155 mm
165 W	155 mm
200 W	155 mm

3

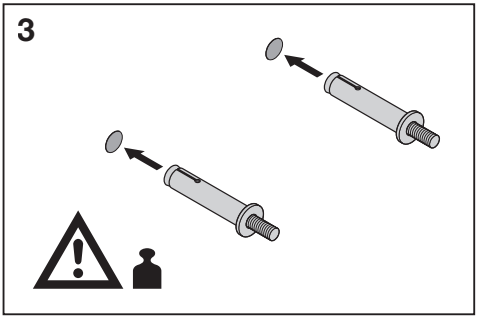

4

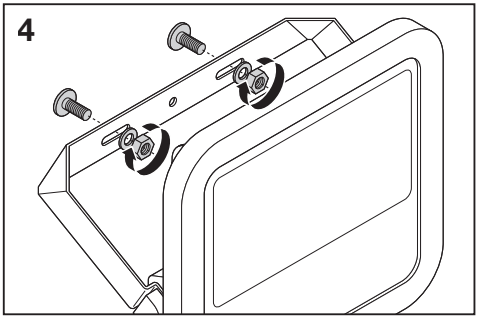

5

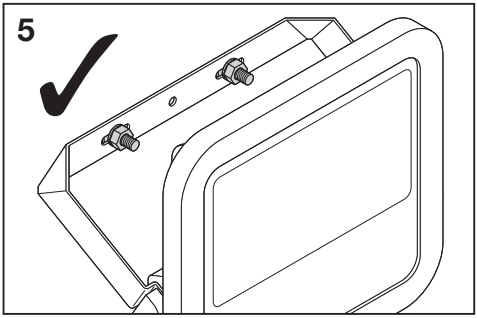

6

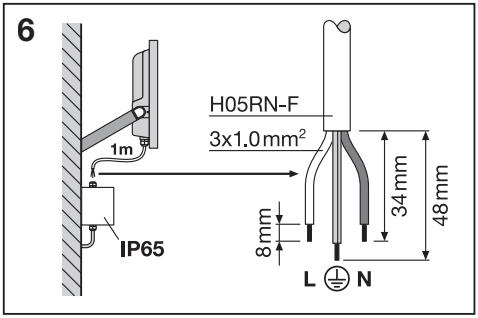

7

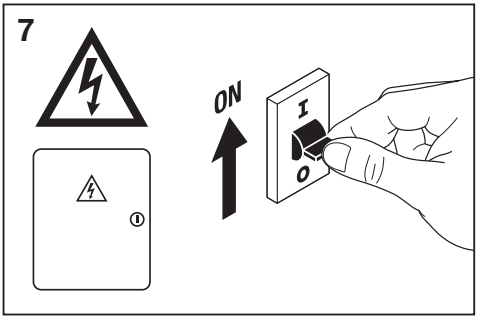

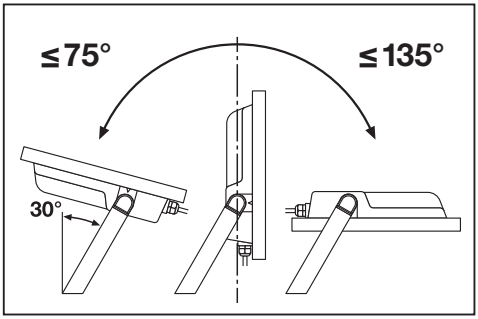

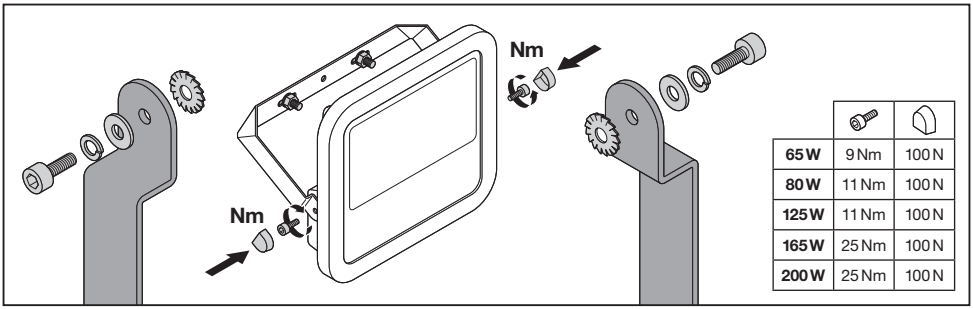

65 W	9 Nm	100 N
80 W	11 Nm	100 N
125 W	11 Nm	100 N
165 W	25 Nm	100 N
200 W	25 Nm	100 N

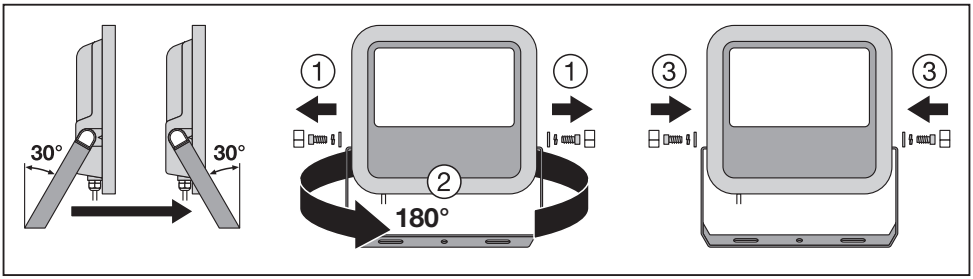

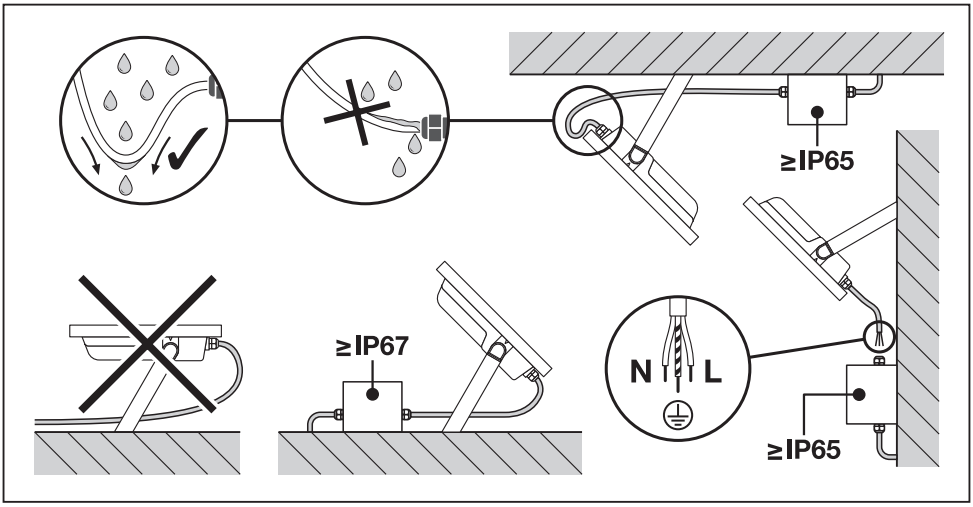

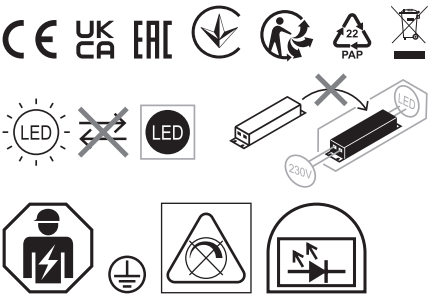

LEDVANCE GmbH
Steinerne Furt 62
86167 Augsburg, Germany
www.ledvance.com

GB LEDVANCE Ltd, Aquila House
Delta Crescent, Westbrook, Warrington
WA5 7NR, United Kingdom

C10449057
G11150378
13.09.22